RESEARCH

UDOT CONNECTING COMMUNITIES

Utah Department of Transportation - Research Division
4501 South 2700 West, Box 148410 - Salt Lake City, Utah 84114-8410

Report No. UT-07.01

TIME DEPENDENT EFFECTS FROM MONITORING OF STATE STREET BRIDGE FRP COMPOSITE RETROFIT

Prepared For:

Utah Department of Transportation
Research Division

Submitted by:

University of Utah
Department of Civil & Environmental Engineering

Authored by:

Chris P. Pantelides
Jaron T. Reay
Lawrence D. Reaveley

December 2006

DISCLAIMER

The Contents of this report reflect the view of the authors, who are responsible for the facts and accuracy of the data presented herein. The contents do not necessarily reflect the official views or policies of the Utah Department of Transportation (UDOT).

1. Report No.	2. Government Accession No.	3. Recipient's Catalog No.
UT- 07-01		

4. Title and Subtitle	5. Report Date
TIME-DEPENDENT EFFECTS FROM MONITORING OF STATE STREET BRIDGE FRP COMPOSITE RETROFIT	DECEMBER, 2006
	6. Performing Organization Code
7. Author Chris P. Pantelides Jaron T. Reay Lawrence D. Reaveley	8. Performing Organization Report No. CVEEN -06/1
9. Performing Organization Name and Address University of Utah Department of Civil & Environmental Engineering 112 South Central Campus Drive Salt Lake City, Utah 84112-0561	10. Work Unit No.
	11. Contract or Grant No.
12. Sponsoring Agency Name and Address Utah Department of Transportation 4501 South 2700 West Salt Lake City, Utah 84114-8410	13.Type of Report & Period Covered FINAL
	14. Sponsoring Agency Code

15. Supplementary Notes
Prepared in cooperation with the Utah Department of Transportation or U.S Department of Transportation, Federal Highway Administration

16. Abstract

This project report summarizes the results of monitoring the State Street Bridge on Interstate 80, which is a reinforced concrete bridge retrofitted with Fiber Reinforced Polymer Composites. Strengthening reinforced concrete bridges by using Fiber Reinforced Polymer (FRP) composites is proving to be a more effective method compared to traditional retrofit methods. FRP composites have a number of advantages over reinforced concrete and structural steel, including their high strength-to-weight ratio and excellent durability, and have been used widely to replace steel in the retrofit of concrete columns. Destructive and non-destructive techniques were employed to evaluate the long-term durability of the Carbon FRP (CFRP) composite and externally CFRP-reinforced concrete of the State Street Bridge on Interstate 80, including the bond-to-concrete capacity of the CFRP composite for three years of exposure. Thermographic imaging was used for detection of voids between CFRP composite and concrete. Although environmental conditions were found to have an effect on the long term durability of the CFRP composite and CFRP-reinforced concrete substrate, no evidence of further steel reinforcement corrosion was observed, and the CFRP composite retrofit is still effective. The research has shown that the seismic performance capability of the bridge did not degrade significantly when compared to the original conditions in 2000 when the retrofit was done. Recommendations for implementation and future research are made.

17. Key Words	18. Distribution Statement	23. Registrant's Seal
Durability, FRP Composites, Health Monitoring, Reinforced Concrete Bridges, Seismic Retrofit, Time-Dependent Effects	UDOT Research Division 4501 south 2700 West-box 148410 Salt Lake City, Utah 84114	

19. Security Classification	20. Security Classification	21. No. of Pages	22. Price
Unclassified	Unclassified	33	

Acknowledgements

The authors would like to thank the following individuals for their support thought the project and wish to acknowledge Mr. Doug Anderson, Mr. Daniel Hsiao, and Mr. Stan Burns of the Utah Department of Transportation (UDOT) for their help with coordinating between UDOT and University of Utah.

The authors would like to acknowledge Sika Corporation for their contribution of the FRP composite materials. The authors also acknowledge the assistance of Gerber Construction Inc., and EDO Fiber Science.

In addition, they acknowledge the assistance of Dr. Larry Cercone of Comptek Structural Composites, Inc. The authors also acknowledge the following individuals and students from the University of Utah: Mark Bryant, Yasuteru Okahashi, and Brandt Saxey.

TABLE OF CONTENTS

LIST OF TABLES..……ii

LIST OF FIGURES……...iii

EXECUTIVE SUMMARY..……..iv

1. INTRODUCTION....……1

2. FRP COMPOSITE MATERIALS AND APPLICATION.....……4

3. INSTRUMENTATION...…….……5

4. HEALTH MONITORING DATA ANALYSIS.....……8

5. DESTRUCTIVE TEST RESULTS..…….. .....……10

6. SUMMARY AND RECOMMENDATIONS..…….…..18

7. REFERENCES..……..…….…..23

LIST OF TABLES

Table 1. CFRP composite laminate properties for SikaWrap® Hex 103HS.....4
Table 2. Epoxy resin mechanical properties for Sikadur® Hex 300.....4
Table 3. Fiber properties for SikaWrap® Hex 103C-HS.....4
Table 4. Adhesive mechanical properties for Sikadur® Injection Gel.....4
Table 5. Test results for CFRP composite tensile coupons.....10

Table 6. Test results for fiber volume and glass transition temperature...….....10
Table 7. Test results for CFRP composite tensile coupons.....11

Table 8. Test results for CFRP composite rings.....13

Table 9. Test results for CFRP composite confined concrete cylinders.....15
Table 10. Test results for CFRP composite-to-concrete bond tests.....16

LIST OF FIGURES

Figure 1. Dimensions of typical bent of State Street Bridge on Interstate 80.....2
Figure 2. CFRP composite retrofit of typical bent; N= number of actual CFRP layers applied.....2
Figure 3. Location and readings of strain gauges on southeast column.....6
Figure 4. Location and readings of strain gauges on underside of cap beam.....6
Figure 5. Thermographic images of void in column: (a) June 2003; (b) December 2003..9

Figure 6. Modulus of elasticity of CFRP composite from tensile coupons……..….12

Figure 7. Split-disk fixture for testing CFRP composite rings.....13
Figure 8. Experimental results for CFRP composite rings with split-disk fixture.....14
Figure 9. Experimental results for compressive strength of CFRP-confined concrete specimens.....15
Figure 10. CFRP composite-to-concrete pull-off adhesion test: (a) 6 months, (b) 12 months.....16
Figure 11. Experimental results for bond strength of CFRP to concrete.....17

EXECUTIVE SUMMARY

This project report summarizes the results of monitoring the State Street Bridge on Interstate 80, which is a reinforced concrete bridge retrofitted with Fiber Reinforced Polymer Composites. Strengthening reinforced concrete bridges by using Fiber Reinforced Polymer (FRP) composites is proving to be a more effective method compared to traditional retrofit methods. FRP composites have a number of advantages over reinforced concrete and structural steel, including their high strength-to-weight ratio and excellent durability, and have been used widely to replace steel in the retrofit of concrete columns. Destructive and non-destructive techniques were employed to evaluate the long-term durability of the Carbon FRP (CFRP) composite and externally CFRP-reinforced concrete of the State Street Bridge on Interstate 80, including the bond-to-concrete capacity of the CFRP composite for three years of exposure. Thermographic imaging was used for detection of voids between CFRP composite and concrete. Although environmental conditions were found to have an effect on the long term durability of the CFRP composite and CFRP-reinforced concrete substrate, no evidence of further steel reinforcement corrosion was observed, and the CFRP composite retrofit is still effective. The research has shown that the seismic performance capability of the bridge did not degrade significantly when compared to the original conditions in 2000 when the retrofit was done. Recommendations for implementation and future research are made.

MONITORING OF STATE STREET BRIDGE FRP RETROFIT

This report presents a detailed description of the seismic retrofit of the State Street Bridge on Interstate 80 using Carbon Fiber Reinforced Polymer (CFRP) composites. The report includes a description of the CFRP materials and application, the instrumentation used for the non-destructive monitoring of the bridge, and analysis of the data obtained. In addition, the report describes the destructive tests carried out on samples of the FRP composite and analysis of the data obtained, as well as an overall evaluation of the monitoring effort and recommendations regarding this type of bridge seismic retrofit.

1. INTRODUCTION

There is a need to repair older reinforced concrete bridges to increase their load carrying capacity or for seismic rehabilitation; the use of Fiber Reinforced Polymer (FRP) composites to fill that need has become a viable option. The increasing interest is due to the high strength-to-weight ratio, the ease of application, and inherent resistance of FRP composite materials to corrosion. However, the use of FRP composite materials in concrete structures is relatively new and a number of issues remain to be addressed. Durability of FRP composite materials and FRP-reinforced concrete subjected to environmental effects has been identified as a critical research need (Harries et al. 2003).

Accelerated testing of CFRP composites has provided some information regarding their durability, but there is a genuine need for obtaining durability data from actual field applications to confirm and validate accelerated testing methods and results (Cardon et al. 1996). In an investigation of freeze-thaw durability of FRP composites, Karbhari et al. (2002) found that the presence of moisture has a significant effect both in terms of physical and chemical aging processes, and in terms of microcracking and fiber–matrix debond initiation; they also found that the level of microcracking in samples subject to freeze-thaw in salt water was higher than the samples subject to freeze-thaw in deionized water. Wu et al. (2004), in an investigation of water effects on the properties of epoxy adhesives found that after immersion in 45°C water for 3 months, two commonly used adhesive systems had a weight gain of between 1.2% and 6.5%, which could lead to worsening of their mechanical properties. Thus, the type and formulation of the epoxy is critical in determining the level of water penetration of the FRP composite.

Lack of long-term durability data is an impediment to the broad adoption of FRP composite materials in infrastructure applications. Hayes et al. (2000), after performing a study on a bridge rehabilitated with FRP hybrid composite girders, pointed out that establishing field test sites to assess structural behavior and durability of FRP composite systems in actual service conditions is the key to developing confidence in design with FRP composites. Studies on field applications of FRP materials have been limited, and many of those that have been performed have not provided the type of real-time, long-term durability data needed to better understand the effects of environmental conditions on FRP materials (Teng et al. 2003). Hag-Elshafi et al. (2003) performed a study on a bridge FRP strengthening system; results from both health monitoring and load testing indicated that the quality of the bond between the FRP laminates and concrete, and the effectiveness of the retrofit system had not changed after two years of service.

Because of the characteristics of Utah's bridges and the local climate, the State Street Bridge at Interstate 80 in Salt Lake City provided a natural test site for an FRP composite health monitoring application. The Carbon FRP (CFRP) composite design, specifications, and construction details of the State Street Bridge seismic retrofit have been reported elsewhere (Pantelides et al. 2004a, 2004b). The CFRP composite retrofit was intended to extend the

service life of the 38-year-old bridge a minimum of 15 years, and thus provide a more manageable replacement schedule for the bridges of the Interstate 80 corridor in Salt Lake City. The CFRP composite retrofit was performed in two stages: the two east bents were retrofitted during the month of August of 2000 and the two west bents were retrofitted during the month of June of 2001. A typical bridge bent is shown in Figure 1. The CFRP composite retrofit with the number of layers (N) actually applied on the bridge is shown in Figure 2.

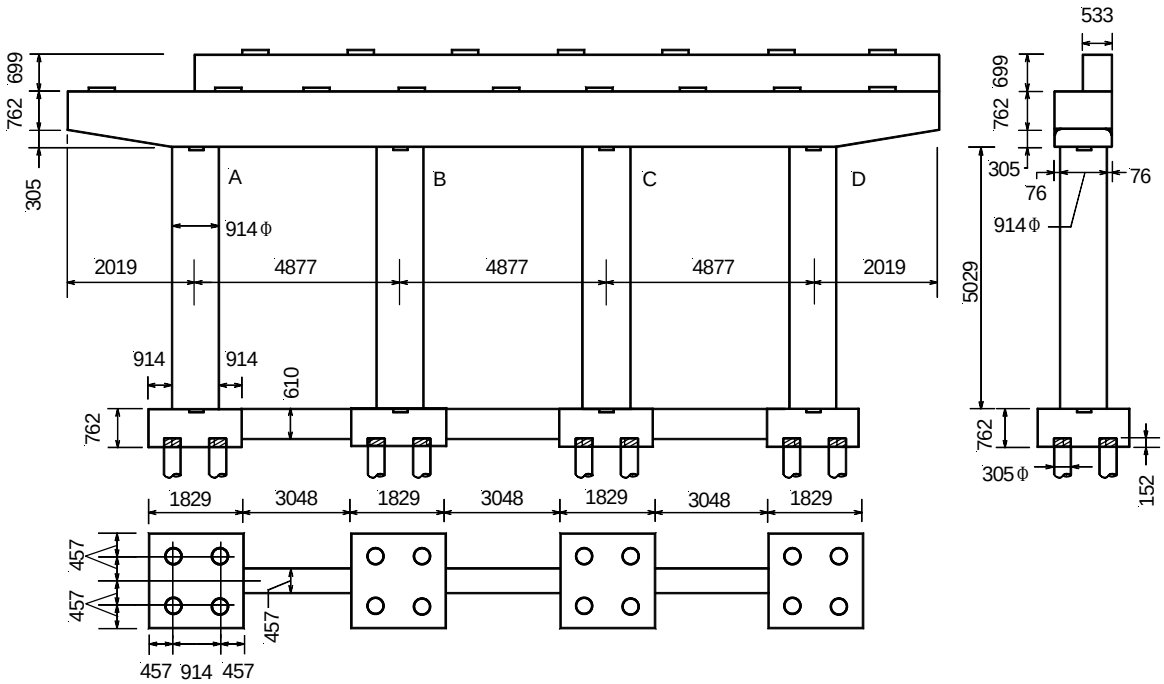

Figure 1. Dimensions of typical bent of State Street Bridge on Interstate 80.

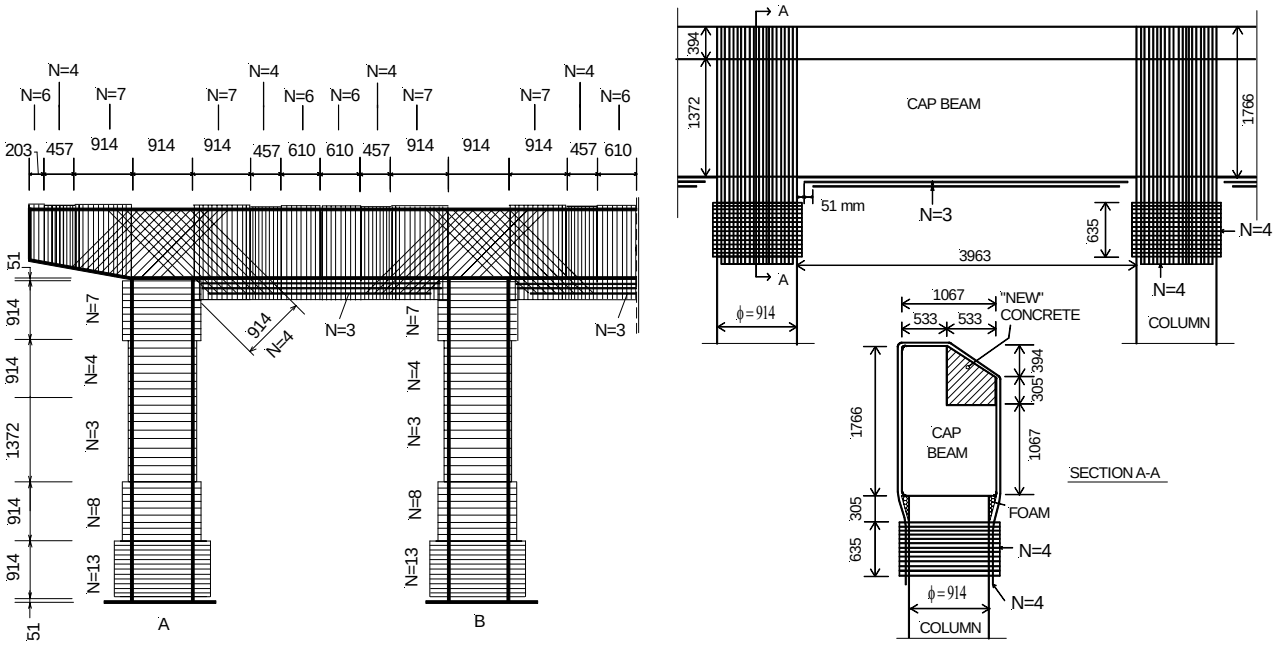

Figure 2. CFRP composite retrofit of typical bent; N= number of actual CFRP layers applied.

The retrofit of the State Street Bridge provided an opportunity to perform a long-term durability study of the CFRP composite material and CFRP-reinforced concrete. The objectives of the study were: (1) Health monitoring and performance evaluation of the bridge retrofitted with a CFRP composite system; (2) Evaluation of the ultimate strength and strain capacity of the CFRP composite due to environmental factors such as changes in temperature, moisture/humidity, ultraviolet light, and freezing/thawing cycles; and (3) Evaluation of the long-term effects of the environment on the bond strength between the CFRP composite and concrete, and on the CFRP composite confinement effectiveness. Thus, the seismic retrofit could be evaluated for its effectiveness including environmental degradation.

2. FRP COMPOSITE MATERIALS AND APPLICATION

The CFRP composite system applied on the bridge was SikaWrap® Hex103HS, with the mechanical properties shown in Table 1. The resin used was Sikadur® Hex300, a high-modulus, high-strength, impregnating epoxy with the properties shown in Table 2; the resin is a bisphenol epoxy with an amine hardener. The carbon fiber was Sikadur® Hex103C-HS, a high strength, unidirectional carbon fiber fabric with the properties shown in Table 3. The fabric was laminated using a manually operated saturating machine to produce the CFRP, which was used to strengthen the cap beam, columns, and joints. The use of a saturating machine minimizes the variation in fiber volume ratio between batches. The concrete surface was prepared using a high pressure water jet, after which an adhesive was applied to the concrete surface. The adhesive used was Sikadur® Injection Gel, a high-modulus, high-strength, structural epoxy paste adhesive, with the properties shown in Table 4. While the injection gel was still fresh, the CFRP composite was applied to the substrate and cured at ambient conditions.

Table 1. CFRP composite laminate properties for SikaWrap® Hex 103HS[1]

Property	Value	ASTM Test
Tensile Strength (MPa)	1022	D3039
Tensile Modulus (MPa)	71716	D3039
Tensile % Elongation	1.31	D3039
Ply Thickness (mm)	1.016	--

[1]Average values supplied by the manufacturer: Properties after 5-days cure at 21°-24° C and 48 hour post cure at 60° C

Table 2. Epoxy resin mechanical properties for Sikadur® Hex 300[1]

Property	Value	ASTM Test
Tensile Strength (MPa)	72	D638
Tensile Modulus (MPa)	3165	D638
Elongation @ Break (%)	4.8	D638
Flexural Strength (MPa)	123	D790
Flexural Modulus (MPa)	3116	D790

[1]Supplied by the manufacturer

Table 3. Fiber properties for SikaWrap® Hex 103C-HS[1]

Property	Value
Tensile Strength (MPa)	4760
Tensile Modulus (MPa)	234000
Elongation (%)	1.5
Density (g/cc)	1.8

[1]Supplied by the manufacturer

Table 4. Adhesive mechanical properties for Sikadur® Injection Gel[1]

Property	Value	ASTM Test
14-day Tensile Strength (MPa)	29.7	D638
14-day Tensile Modulus (MPa)	2829	D638
14-day Elongation @ Break (%)	1.3	D638
14-day Flexural Strength (MPa)	46.2	D790
14-day Tangent Modulus of Elasticity in Bending (MPa)	5175	D790
14-day Shear Strength (MPa)	25.5	D732

[1]Supplied by the manufacturer

3. INSTRUMENTATION

The bridge instrumentation involved the installation of 100 strain gauges (both embedded in the CFRP composite and applied to the outer CFRP layer), four thermocouples embedded into the concrete, two relative humidity/temperature sensors, and six tiltmeters.

Strain Gauges

Two types of strain gauges were used: For the east bent, the following gauges were used: EA-06-125BZ-350; this gauge has a polyimide backing, it is tough and extremely flexible, and is less sensitive to mechanical damage during installation compared to other strain gauges. It has a temperature range of -75°C to +175°C, a gauge length of 3.18 mm, and a resistance of 350-ohms. For the west bent, the following gauges were used: WK-06-250BG-350; this gauge has an epoxy-phenolic backing material and provides good performance over the widest range of temperatures. It has a temperature range of -269°C to +290°C, a gauge length of 6.35 mm, and a resistance of 350-ohms. Once the location of each strain gauge was determined, each area was smoothed and cleaned, and each gauge was attached to the CFRP composite with no overlapping. A different strain gauge adhesive was used for attaching the strain gauges on the west bent than on the east bent; the east bent used a two-component, 100% solids epoxy adhesive for general-purpose stress analysis; the west bent adhesive required a constant pressure of at least 69 kPa on the strain gauge for five hours; steel straps and wooden blocks were used to apply the required pressure. Construction on the southeast bent of the State Street Bridge began in August 2000. Application of strain gauges was carried out throughout construction. The columns were the first structural elements of the bent to be wrapped. After the first CFRP composite layer was applied, at least one day (depending on temperature and humidity) was required to allow the epoxy resin to partially cure. Once it had sufficiently hardened, the first layer of strain gauges was applied in several locations. The columns were then wrapped with the specified number of CFRP composite layers, and strain gauges were applied to the final layer. An example of this procedure for one of the columns is shown in Figure 3.

After the columns had been wrapped, the CFRP composite was applied to the cap beam soffit. Strain gauges were applied at the midspan of the cap beam in three locations as shown in Figure 4; the gauges were applied on the first and last layers of the CFRP composite. The cap beam-column joints were the third type of structural elements of the bent to be wrapped with CFRP composites. The CFRP composite sheets were applied diagonally at ±45 degrees from the horizontal in the joint area; the strain gauges were applied parallel to the fiber direction in all cases. CFRP composite stirrups, wrapped 360-degrees around the cap beam as shown in Figure 2; at the location where the column joins the cap beam, a CFRP U-strap was placed over the cap beam and was attached to the column, as shown in Figure 2. Strain gauges were placed at several other locations down the U-strap and wrapped CFRP stirrups; the gauges were applied vertically to in the fiber direction on the first and last CFRP composite layers.

Thermocouples

The thermocouples used for this project were Waltow K20/1/507 FEP Insulated type K. The operating range for this durable sensor is from -200°C to +200°C. The thermocouple is prepared by joining two dissimilar metal wires at one end using a torch; the other end is attached to the data acquisition system. In this project four thermocouples were used; a small hole was drilled into the cap beam and the thermocouple was then glued into the hole with epoxy; the

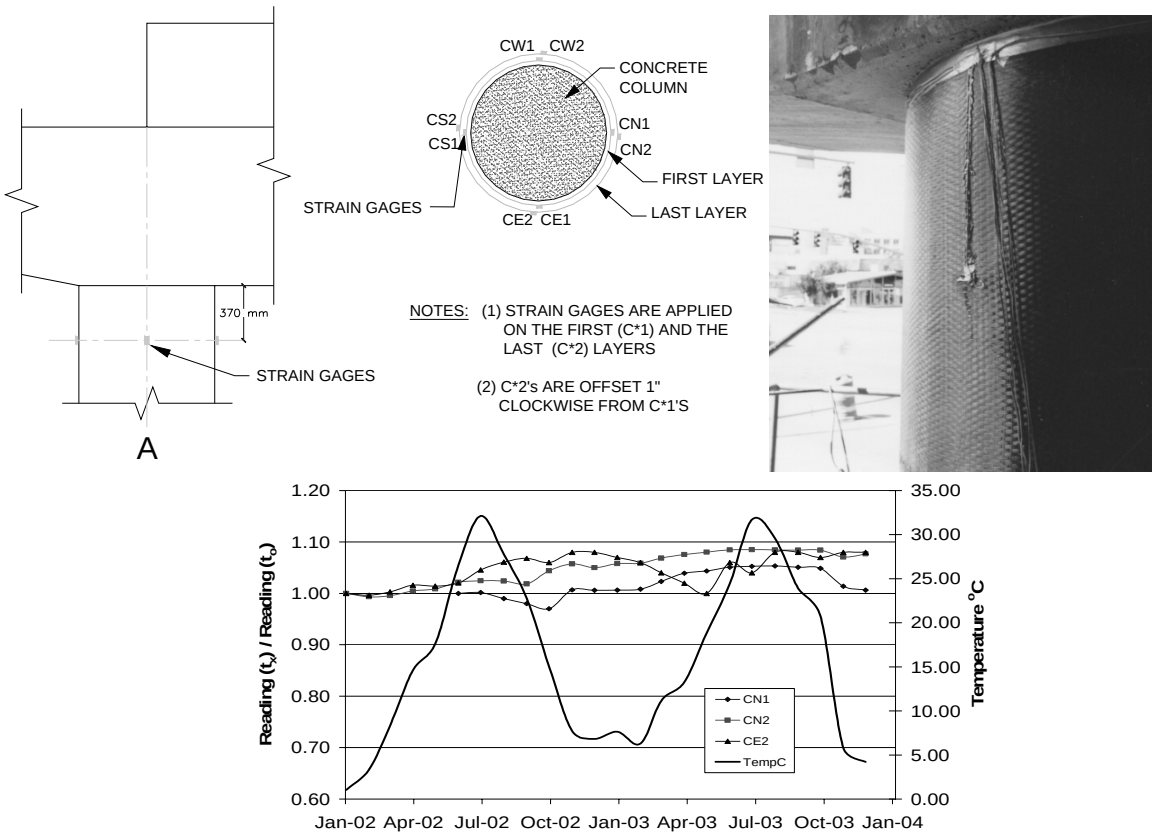

Figure 3. Location and readings of strain gauges on southeast column.

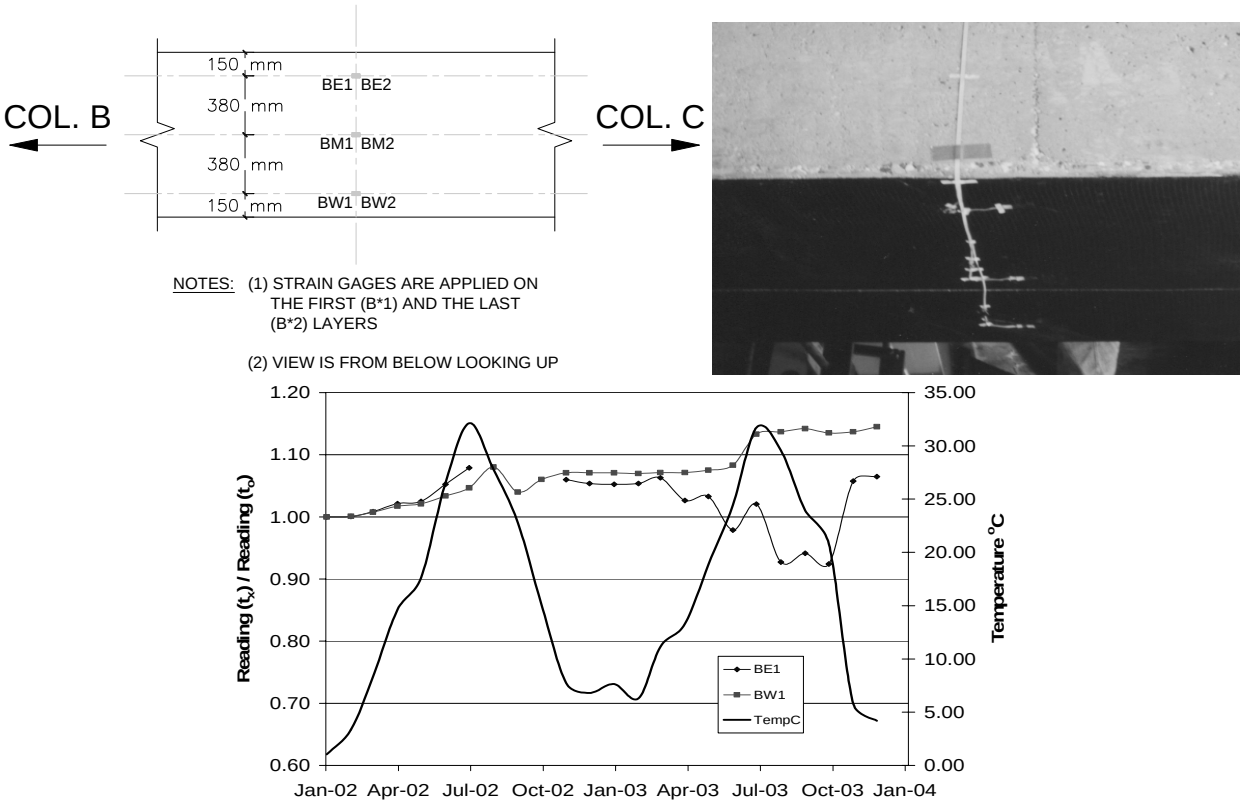

Figure 4. Location and readings of strain gauges on underside of cap beam.

thermocouples were embedded into the southeast bent: two on the south end, and two on the north end.

Relative Humidity/Temperature Sensors

The humidity sensors used for this project were Hannah Instruments 8666 Relative Humidity/Temperature sensors; their range of operation is from 0% to 100% relative humidity, and -20°C to +60°C. The sensors were mounted near the locations of the thermocouples, so the air temperature readings they provided could be compared to the internal temperature readings from the thermocouples, and a direct correlation between the readings could be established.

Tiltmeters

Geokon 6350 Vibrating Wire Tiltmeters were used to measure the rotation of the cap beam. The tiltmeters have an operating range of -20°C to +80°C and ±10 degrees rotation; they are accurate to $\pm 1 \times 10^{-5}$ degrees rotation. The tiltmeters were attached to a mounting bracket, which was then anchored to the side of the cap beam.

Each sensor was connected to an automated data acquisition system that takes readings from each sensor every three minutes, and reports the average reading every 15 minutes. A wireless remote Ethernet connection from the University of Utah to the data acquisition system allowed real-time monitoring and collection of the stored sensor data.

4. HEALTH MONITORING DATA ANALYSIS

Analysis of the collected data indicates that on a daily basis, temperature, humidity, and traffic loads affect the strain in the CFRP composite. It must be noted that the CFRP composite was applied while the bridge was in service. Therefore, the application of the CFRP composite was under preloading and as such, a small amount of strain was present in the substrate concrete.

Strain Gauge Data

Temperature and traffic loads had a major effect on daily strain variations in the CFRP composite. Figures 3 and 4 show the average monthly strain measurements of several randomly chosen strain gauges, plotted with the average monthly temperature over a two-year period. For uniformity, all strains were normalized by the initial reading. Figure 3 shows that after two years there is a moderate increase in strain over time for the column strain gauges, independent of temperature; similarly, Figure 4 shows that for the cap beam gauges there is also an increase in strain; the same trend is followed by the strain gauges attached to the FRP at the cap-beam column joint, and the FRP U-straps. The cause of the variation and general increase in strain are not understood well; however, it was noted that a number of strain gauges stopped functioning after long periods of operation. Therefore, the strain gauges used in this project are not recommended for the purpose of long term monitoring. There are other devices that are now being developed for long term monitoring of FRP composite systems, such as fiber optic sensors.

The strain gradient was obtained from several strain gauges through the CFRP layers. The strain gradient decreases with increasing CFRP thickness. The average strain gradient in the cap beam-column joint was 27 microstrain/mm through one CFRP layer; the average strain gradient in the CFRP U-straps was 10 microstrain/mm through two CFRP layers; the average strain gradient in the column top was 4 microstrain/mm through four CFRP layers. It is observed that thicker CFRP composite laminates experience reduced strain.

Tiltmeter Data

The daily tiltmeter degree of rotation generally remained within $\pm 2.0 \times 10^{-6}$ radians. The tiltmeters experience the greatest rotations between 3:00 pm and 6:00 pm when the traffic over the bridge is heaviest. The increased distributed lane loads from rush hour traffic and/or changes in temperature have a measurable effect on the measured strain of the CFRP composite laminate.

Thermographic Imaging

Thermographic imaging has been used as a method of detecting localized bond flaws and voids (Hag-Elsafi et al. 2003). When an area containing possible voids is evenly heated, properly bonded areas conduct the heat into the concrete. Voids cannot conduct heat into the concrete, and therefore they show up prominently in a thermographic image. In June 2003 several thermographic images were taken at various locations on the southeast bent of the State Street Bridge. A number of voids of varying size and shape were discovered within the CFRP composite system. It was unknown if these voids had formed because of delamination over time, or if they were the result of construction defects in the application of the CFRP composite to the bridge during the retrofit; the latter is more likely. Therefore, additional thermographic images were taken six months later to determine if any changes had taken place.

Figure 5 shows a thermographic image of a large void discovered on one of the columns, which clearly shows up within the heated area of the column. Image (a) was taken in June 2003 and image (b) was taken six months later in December 2003. The size of the oval shaped void in

Figure 5(a) was approximately 100 mm in the horizontal and 80 mm in the vertical direction. It appears that the size of the void has stayed relatively constant from June to December and that the void was probably created at the time of application of the CFRP composite. Quantitative evaluation requires more extensive measurements, and research in this area is currently ongoing (Starnes et al. 2003). No other voids discovered from images taken in June 2003 have shown any change or indication of bond degradation.

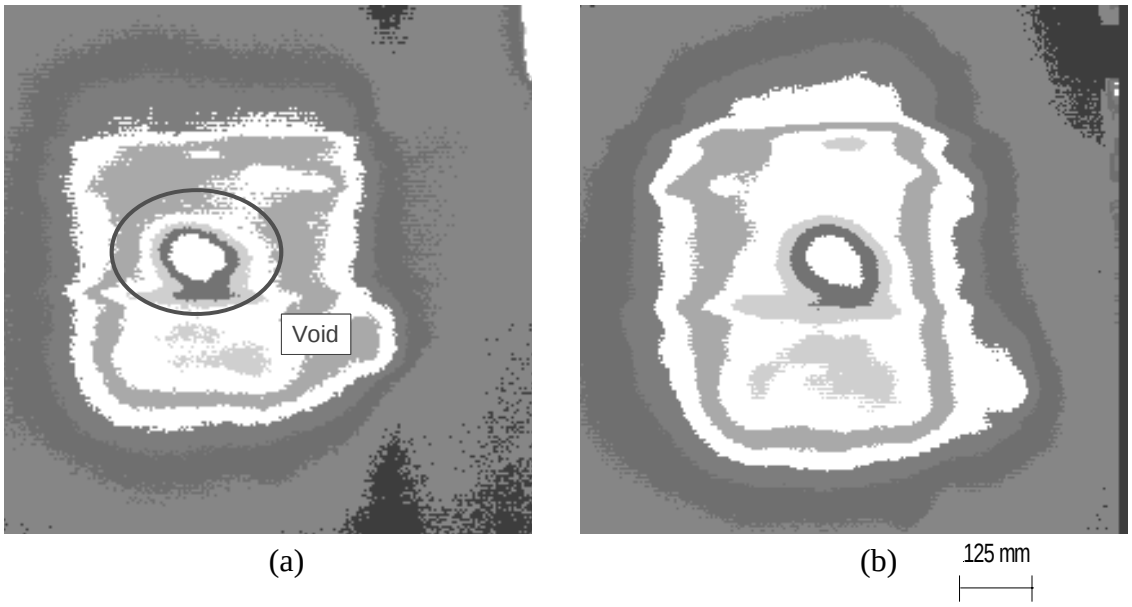

Figure 5. Thermographic images of void in column: (a) June 2003; (b) December 2003.

5. DESTRUCTIVE TEST RESULTS

The most direct way to monitor the degradation of CFRP composite and externally CFRP-reinforced concrete at the State Street Bridge was through destructive strength tests of various types of specimens that were not part of the bridge rehabilitation. The specimens were made of the same CFRP composite system as that used in the bridge rehabilitation. This portion of the study differs from the health monitoring portion in that the specimens are tested to ultimate capacity. The specimens were tested at approximately six-month intervals to monitor the change in ultimate strength and strain capacity over time. Four types of specimens were prepared during construction of the retrofit: CFRP composite tensile coupons, CFRP composite rings, CFRP composite confined concrete cylinders, and CFRP composite-to-concrete bond test specimens.

During construction of the CFRP composite retrofit, three types of tests were carried out: (1) CFRP tensile coupon tests according to ASTM D3039, (2) Fiber volume tests performed according to ASTM D3171, and glass transition temperature tests performed according to ASTM D4065. Table 5 shows the results for the CFRP tensile coupon tests in terms of ultimate CFRP composite strength, ultimate uniaxial strain and elastic modulus, and compares them to the requirements of UDOT's *Supplemental Specification* developed for this project (Pantelides et al. 2004a). A total of 415 coupons were tested in the two testing periods; it can be observed that the CFRP composite properties were higher for the east bents. The standard deviation of the results for stress, strain and modulus was within 10% of the average value. Table 6 shows the results for the fiber volume and glass transition temperature tests, and compares them to the UDOT *Supplemental Specification*. A total of 15 coupons were tested for this purpose for the east bents only; all of the CFRP composite material applied to State Street Bridge meets the specification.

Table 5. Test results for CFRP composite tensile coupons

Category	Number of tests	Average Ultimate Stress (MPa)	Average Ultimate Strain (%)	Average Modulus (MPa)
Specification*	50	960	1.3	73100
East Bents[§] 7/26/2000 - 10/24/2000	245	1307	1.4	95233
West Bents[§] 6/27/2001 - 8/13/2001	170	1130	1.3	83565

*UDOT Supplemental Specifications (Pantelides et al. 2004a)
[§]Performed by EDO Fiber Science according to ASTM D3039

Table 6. Test results for fiber volume and glass transition temperature

Category	Number of tests	Fiber Volume[#] Vf (%)	Standard Deviation Vf (%)	Glass Transition Temperature[@] Tg (°C)	Standard Deviation Tg (°C)
Specification*	-	40	-	60	-
East Bents[§] 9/15/2000 - 11/1/2000	15	42.1	4.2	73.0	6.3

*UDOT Supplemental Specifications (Pantelides et al. 2004a)
[§]Fiber Volume tests performed by EDO Fiber Science according to ASTM D3171
[@]Glass Transition temperature tests performed by EDO Fiber Science according to ASTM D4065

CFRP Composite Tensile Coupons

Tensile coupons were used to determine the ultimate tensile strength and strain capacity, and the elastic modulus of the CFRP composite. The tests were performed in accordance with ASTM D3039 (ASTM 2001a) using two layers of unidirectional composite. Two different types of tensile coupons were tested: (1) the first type was from a 400 x 400mm CFRP composite sacrificial patch, not part of the bridge rehabilitation, which was attached to the side of the cap beam of the southeast bent (east vertical face of cap beam) on State Street Bridge; half of the patch was covered with a UV protective coating, and the other half was uncovered in order to determine what effect, if any, the coating had on the CFRP composite strength and strain capacity; (2) the second type was from 350 x 350mm CFRP composite panels made during the construction phase of the project. The panels were stored at three different locations: (a) on top of the cap beam at the State Street Bridge; (b) inside a cage located at ground level between two columns of the State Street Bridge; and (c) in an isolated area of the Structures Laboratory at the University of Utah. The purpose of having three different locations was to determine which environmental condition had the greatest effect on CFRP composite durability.

Table 7 shows the test results and compares them to the baseline specimens, which are the 415 tests carried out during construction, and shown in Table 5. The average of five specimens for each test is reported in Table 7. The results indicate that the ultimate strength capacity in every group, except the bent top, is increasing. The increase in ultimate strength capacity for the lab panels is 12%, and for the cage panels 9%; for the panels at the bent top there is an ultimate strength capacity decrease of 3%, and for the patches very little difference. The lab panels had an increase in elastic modulus of 11%, the cage panels had no significant increase, the bent top panels and painted patches with an UV coating had a decrease of 2%, and the patches not painted with an UV coating had a decrease of 9%. Thus, the elastic modulus of the patches not painted with the UV coating seems to be affected adversely by environmental exposure, as shown in Figure 6.

Table 7. Test results for CFRP composite tensile coupons*

Specimen Category	Specimen Age (months)	Average Ultimate Stress (MPa)	Average Ultimate Strain (%)	Average Modulus (MPa)	%Change in Stress from Baseline	%Change in Strain From Baseline	%Change in From Baseline
Baseline Panels	0	1235	1.37	90510	-	-	-
Lab Panels	18	1236	1.30	79834	0.1	-5.1	-11.8
	24	1250	1.23	92848	1.2	-10.2	2.6
	30	1383	1.28	100218	12.0	-6.6	10.7
Cage Panels	6	1117	1.26	80315	-9.6	-8.0	-11.3
	12	1245	1.26	96064	0.8	-8.0	6.1
	18	1349	1.32	90639	9.2	-3.6	0.1
Bent Top Panels	18	1337	1.29	91555	8.3	-5.8	1.2
	24	1226	1.18	87510	-0.7	-13.9	-3.3
	30	1196	1.26	88822	-3.2	-8.0	-1.9
UV-coated Patches on Cap Beam	24	1167	1.19	87508	-5.5	-13.1	-3.3
	30	1229	1.26	88272	-0.5	-8.0	-2.5
Patches without UV-coating on Cap Beam	18	1027	1.14	79903	-16.8	-16.8	-11.7
	24	1165	1.19	89427	-5.7	-13.1	-1.2
	30	1242	1.33	82305	0.6	-2.9	-9.1

*Each number represents the average of 5 tensile coupons except for the baseline specimens where 415 tensile coupons were tested according to ASTM D3039

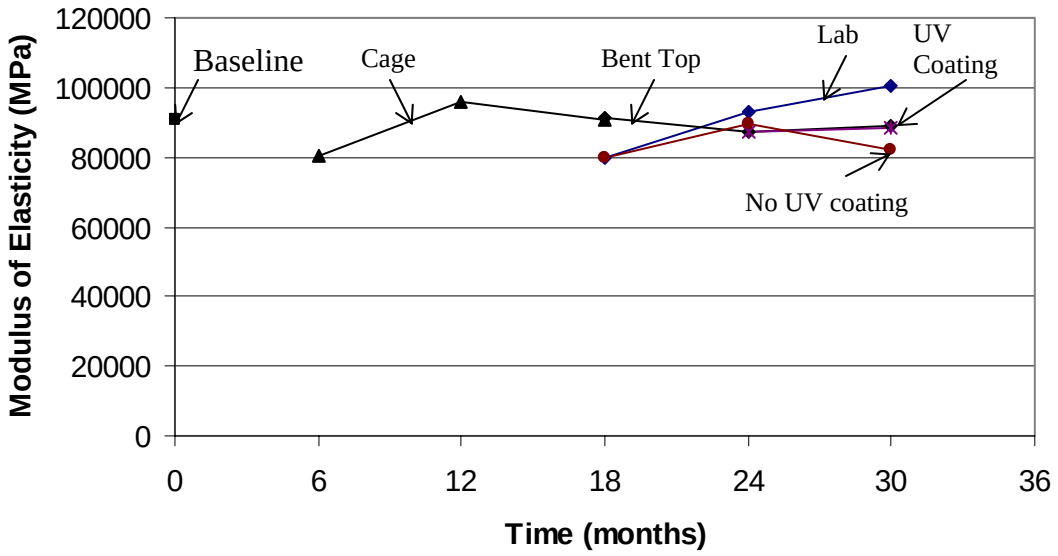

Figure 6. Modulus of elasticity of CFRP composite from tensile coupons.

CFRP Composite Rings

The second type of test examined the hoop strength capacity of the CFRP composite. Throughout the construction phase in the summers of 2000 and 2001, CFRP composite cylinders were made by wrapping five CFRP composite layers around 508 mm diameter stainless steel drums. After the composite had cured, the cylinders were removed from the drums and taken to the three different storage locations. Tests were performed using the split disk method, according to ASTM D2290 (ASTM 2001b). The split disk ring test has a 25 mm-wide ring tested in the device shown in Figure 7. The CFRP ring is tested in tension so the direction of pull load is perpendicular to the split axis of the fixture; a displacement rate of 1mm/min was used. The test introduces high tensile stresses in the CFRP ring at the split line of the fixture, creating a line of pure tension, and the split disk test is easier to perform than the similar pressurized ring test.

The pressurized ring test was used in testing of Naval Ordnance Laboratory (NOL) rings for qualification of the CFRP composite material used at the State Street Bridge by Zhang and Karbhari (2000). Five CFRP rings were tested in their study, with average results as follows: Ultimate hoop strength = 1103 MPa, Elastic hoop modulus = 103,325 MPa; these values are within the range of the results obtained in this study using the split-disk test, as shown in Table 8. The average of five specimens for each test result is reported in Table 8; the CFRP rings exhibited a drop in strength capacity but as shown in Figure 8, the ultimate load capacity indicates a leveling off trend. The ultimate strength and strain capacity values of the field specimens are comparable to the lab specimens of the same age. The ultimate strain capacity of each group fluctuates with time, indicating a probable connection to environmental variations. It is recommended that more tests should be carried out for a longer time frame, which should extend to ten years or more.

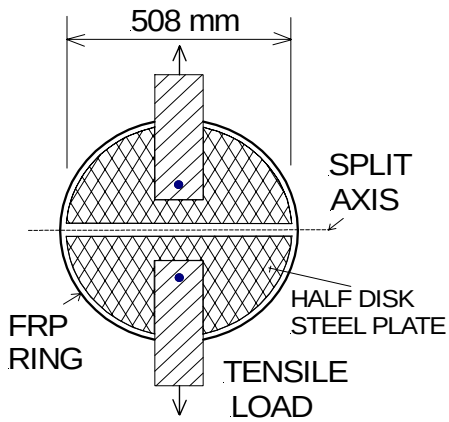

Figure 7. Split-disk fixture for testing CFRP composite rings.

Table 8. Test results for CFRP composite rings[§]

Specimen Category	Specimen Age (months)	Average Ultimate Load (kN)	Average Ultimate Stress (MPa)	Average Ultimate Strain (%)	Average Hoop Modulus (MPa)	% Change in Stress From Baseline*	% Change in Strain from Baseline*
Lab Rings	12	250	1261	1.26	99216	-	-
	18	274	1240	1.45	81507	-1.70	14.76
	24	234	1356	1.21	111666	-	-
	30	219	1123	1.49	87733	-17.21	23.34
	36	204	922	1.09	82741	-32.02	-9.77
Cage Rings	12	244	1296	1.24	102127	-	-
	18	207	1223	1.56	98871	-5.60	26.21
	24	208	1258	1.08	114623	-2.97	-12.62
Bent Top Rings	24	255	1189	1.27	97292	-	-
	30	242	1055	1.47	76541	-11.28	16.43
	36	224	981	1.07	91339	-17.49	-15.48

* Baseline is taken as the results of the first test performed on that group, regardless of specimen age

§ Each number represents the average of 5 split-D ring tests according to ASTM D2290

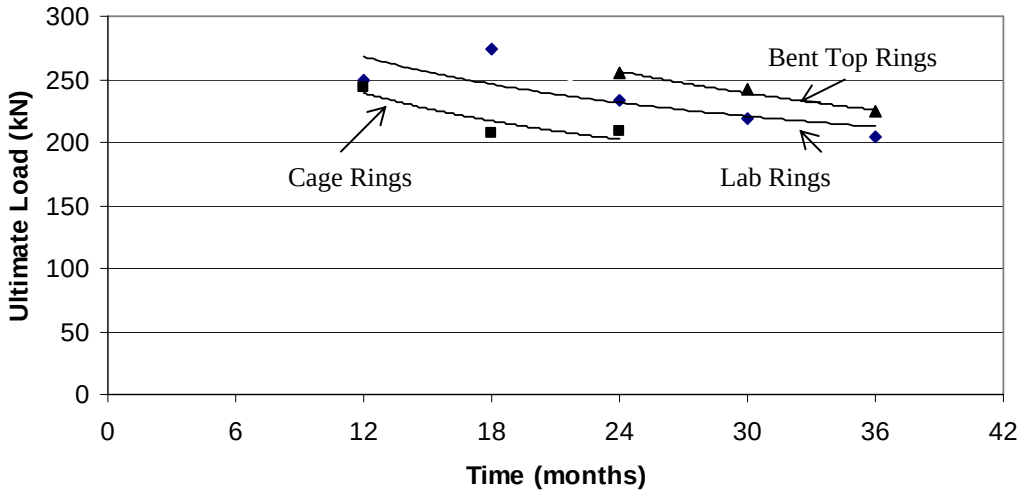

Figure 8. Experimental results for CFRP composite rings with split-disk fixture.

CFRP Composite Confined Concrete Cylinders

The third type of test specimens used in the destructive tests were 150 x 300mm concrete cylinders wrapped with one layer of unidirectional CFRP composite, providing a reinforcement ratio of 2.67% by volume. The cylinders were tested in compression to measure the increase in concrete compressive strength and axial strain capacity provided by CFRP composite confinement. The 28-day average compressive strength of the concrete cylinders was 24 MPa. Each cylinder was instrumented with strain gauges to measure hoop strain, and an LVDT to measure axial strain. The average of three cylinders for each test result from each storage location is reported in Table 9. Even though a saturating machine was used, which minimizes the variation in fiber volume ratio between batches, scatter in the test results is inevitable due to the fact that a manually operated saturating machine and a hand layup process were used. The results show that the initial increase in ultimate compressive strength capacity of CFRP confined cylinders with one CFRP layer is nearly three times the ultimate compressive strength of plain concrete. After two years, each group of specimens experienced a decrease in ultimate compressive strength capacity, ranging from 3% to 8%; this is in addition to the expected moderate increase in compressive strength due to the chemical hydration effect. This trend is also shown in Figure 9; it is recommended that more tests should be carried out for a longer time frame, which should extend to ten years.

Table 9. Test results for CFRP composite confined concrete cylinders*

Specimen Category	Specimen Age (months)	Average Ultimate Stress (MPa)	Average Ultimate Radial Strain (%)	Average Ultimate Axial Strain (%)	% Change in Stress from Baseline	% Change in Radial Strain from Baseline**	% Change in Axial Strain from Baseline**
Lab Cylinders	12	69.17	1.33	1.38	-	-	-
	18	63.02	1.46	1.39	-8.89	9.77	0.72
	24	67.15	1.6	1.41	-2.92	20.30	2.17
Cage Cylinders	12	70.77	1.25	0.96	-	-	-
	18	68.33	1.51	1.07	-3.45	20.80	11.46
	24	65.32	1.52	1.02	-7.70	21.60	6.25
Bent Top Cylinders	12	72.62	1.41	1.50	-	-	-
	18	63.06	1.10	1.45	-13.16	-21.99	-3.33
	24	67.45	1.59	1.63	-7.12	12.77	8.67

* Each number represents the average of 3 tests
** Baseline is the result of the first test performed or 12 months old

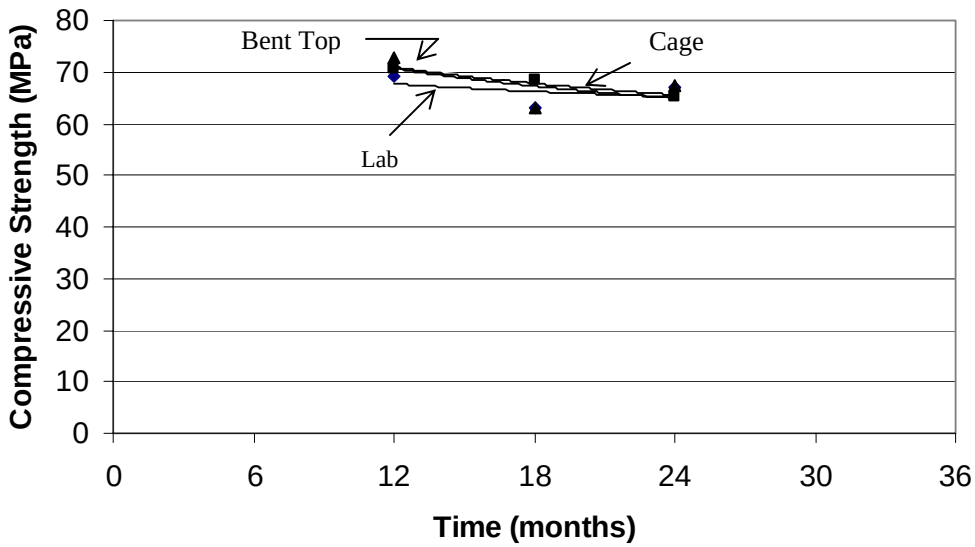

Figure 9. Experimental results for compressive strength of CFRP-confined concrete specimens.

CFRP Composite–to-Concrete Bond Test Specimens

The bond between the CFRP composite and concrete was investigated. The specimens were prepared using 150 x 150 x 300mm concrete blocks; one side of each block was prepared using high-pressure water jet, which was also used for the surface preparation of the State Street Bridge bents; all other sides were wire-brushed to remove any loose particles. One layer of CFRP composite was placed on the water-jetted side, and another layer was placed on the wire-brushed side of each block. The blocks were stored in three storage areas: the Structures Laboratory, the cages at the curb of State Street Bridge, and the cap beam top at State Street Bridge. The CFRP composite-to-concrete bond was measured using pull-off adhesion tests with an Elcometer® adhesion tester, according to ASTM D4541 (ASTM 2001c). In Table 10, the average of ten adhesion tests is reported in each result.

Table 10 shows that initially the average bond strength of the CFRP composite on the water-jetted side of the concrete block was 45% stronger than the wire-brushed side. After six months the water-jetted side showed a significant loss of strength, whereas the wire-brushed groups showed a smaller loss in bond strength capacity; there is no apparent reason for this behavior. Figure 10 shows that the 6-month block failures occurred only in the concrete, but the 12-month block failures occurred in the matrix-to-concrete interface. The water-jetted side continues to exhibit a higher average bond strength capacity than the wire-brushed side. The laboratory specimens generally performed better than field specimens, indicating that environmental factors, such as humidity and UV radiation variations affect CFRP composite-to-concrete bond strength. There has been no visual indication of damage to the concrete, or any steel reinforcement corrosion due to the application or presence of the CFRP composite. This is significant because one important reason for covering the entire surface of the bridge with CFRP composite jackets, as shown in Figure 2, was to encapsulate the reinforced concrete structure in order to eliminate or minimize any further steel corrosion degradation of the bridge.

Table 10. Test results for CFRP composite-to-concrete bond tests

		Water-Jetted			Wire-Brushed		
Specimen Category	Specimen Age (months)	Average Bond Strength (MPa)	Standard Deviation (MPa)	% Change In Strength from Baseline**	Average Bond Strength (MPa)	Standard Deviation (MPa)	% Change in Strength from Baseline**
Lab Blocks	6	7.51	1.47	-	5.41	1.41	-
	12	5.38	1.83	-28.35	5.27	1.53	-2.55
	18	5.86	1.03	-22.02	4.75	1.03	-12.10
	24	5.65	1.24	-24.77	5.20	1.17	-3.86
Cage Blocks	6	7.44	0.97	-	5.24	1.92	-
	12	5.99	1.22	-19.44	5.10	1.09	-2.63
	18	5.31	1.03	-28.70	4.34	0.76	-17.12
	24	5.41	1.03	-27.30	4.48	0.76	-14.45
Bent Top Blocks	6	8.06	0.26	-	5.24	1.15	-
	12	4.63	1.46	-42.56	4.20	1.06	-19.74
	18	4.89	0.96	-39.32	3.72	0.83	-28.95
	24	5.24	0.93	-35.00	4.48	0.76	-14.45

* Each number represents the average of 10 tests according to ASTM D4541
** Baseline is the result of the first test performed when concrete was 6 moths old

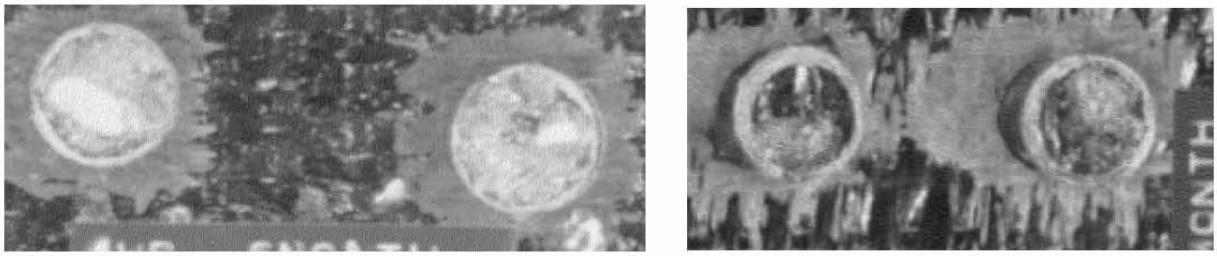

(a) (b)

Figure 10. CFRP composite-to-concrete pull-off adhesion test: (a) 6 months, (b) 12 months

Table 10 demonstrates that the drop in bond strength after three years for water-jetted specimens was between 20% and 35%; for wire-brushed specimens the drop was between 3% and 29%; there is no apparent reason for the greater drop in values for the water-jetted specimens as compared to the wire-brushed specimens; however, even with the bigger drop, the water-jetted bond strength is still higher after three years than the wire-brushed specimens from 9% to 20% because of the higher initial values. The drop in bond strength for specimens stored at the bridge for three years was higher than the drop observed for specimens stored in the laboratory.

The bond between CFRP composite and concrete was investigated further and compared to previous results for similar type specimens (Pantelides et al. 2003a). In those tests, there were three types of specimens: (a) no surface preparation, (b) sandblast, and (c) water jet. The difference in bond strength was as follows: the sandblasted specimens were stronger compared to those with no surface preparation by 15%, and the water-jetted specimens were stronger compared to those with no surface preparation by 28%. Thus, it can be seen that the drop in bond strength due to environmental degradation, even though it is significant, it is within the range of variation which could occur from different surface preparation techniques. Moreover, as Figure 11 shows, it is clear that for both water-jetted and wire-brushed specimens, there is an asymptotic type of behavior, and that the bulk of the bond degradation with time had taken place by the end of the second year. Figure 11 also shows that at the end of two years, the water-jetted specimens still demonstrate superior performance compared to the wire-brushed specimens, with respect to the specific location of the specimens. It is recommended that more tests should be carried out for a longer time frame, which should extend to ten years; original specimens are still available for this purpose.

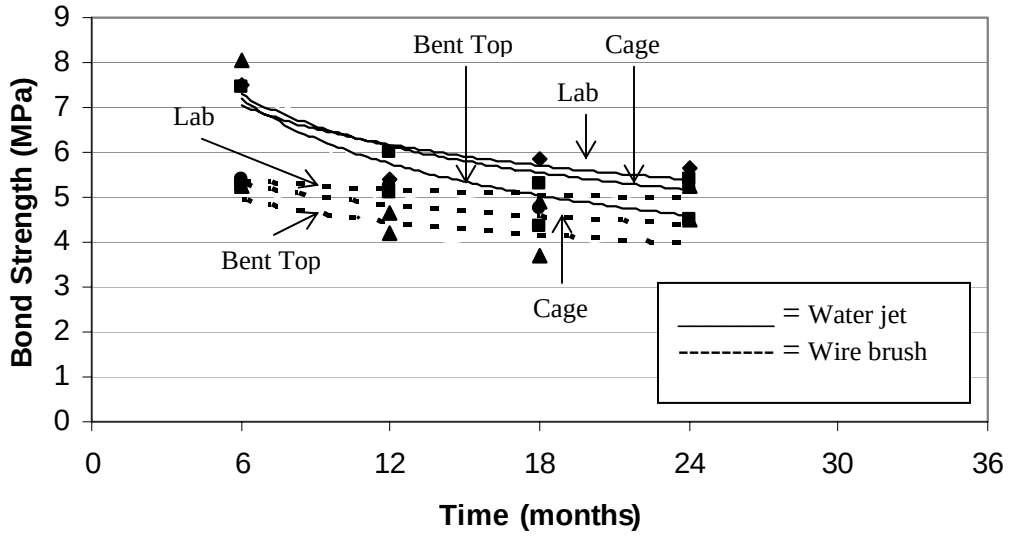

Figure 11. Experimental results for bond strength of CFRP to concrete.

6. SUMMARY AND RECOMMENDATIONS

The summary and recommendations are devided into four sections: (1) Durability, (2) Construction, (3) Specifications, Design, and Seismic Performance, and (4) Future Applications.

(1) Durability

Temperature variations, freeze-thaw cycles in the presence of water and de-icing salt, humidity, and vibrations from traffic loads affect the daily change in the CFRP composite strain. The variation of strain with time is not understood well and the reasons for the strain increase are unknown; however, it is known that the number of strain gauges that stopped working increased as the study progressed with longer periods of operation. Therefore, strain gauges similar to the ones used in this project are not recommended for the purpose of long term monitoring. There are other devices that are now being developed for long term monitoring of FRP composite systems, such as fiber optic sensors which should be considered in future applications. This research has established that UV protective coating has enhanced the resistance of the CFRP composite to environmental degradation. A small number of voids were discovered in the CFRP composite system of the State Street Bridge through thermographic imaging. The time at which the voids were created is not known precisely, but it is likely that they were created during application of the CFRP composite to the bridge, since their size has not increased substantially over time. More sophisticated methods are required to determine quantitatively the size and any enlargement of the voids.

Destructive tests carried out to determine ultimate tensile strength capacity, glass transition temperature, and fiber volume of the CFRP composite applied to the bridge during construction, indicate that the CFRP composite material met the requirements of UDOT's *Supplemental Specification*. The properties of the CFRP composite applied to the east bents were higher than those applied to the west bents. Destructive tests of CFRP composite tensile coupons, and CFRP composite-to-concrete bond specimens have shown that specimens stored in the laboratory, generally give a higher ultimate strength capacity than those stored at the bridge. After a period of three years, the average ultimate strength capacity of the laboratory specimens was higher than that of the specimens stored at the bridge, by an amount of 3% to 16%. This indicates that the environment has an effect on CFRP composite material tensile strength capacity and CFRP composite-to-concrete bond capacity. Similarly, at the end of the monitoring period, the modulus of elasticity of the CFRP composite for tensile coupons without UV coating was lower than that of the baseline specimens and specimens with UV protective coating. The ultimate strength of the CFRP composite rings decreased more than the ultimate strength of CFRP composite tensile coupons after 3 years. The ultimate strength capacity of CFRP confined concrete cylinders from the 12th to the 24th month of exposure has dropped 3% for laboratory specimens and 8% for specimens stored at the bridge.

The destructive test results have indicated that degradation in the strength capacity of CFRP composites, the CFRP confined concrete compressive strength capacity, and CFRP-to-concrete bond strength capacity occurs, regardless of the specimen location due to aging. These reductions are not sufficient to cause debonding of the CFRP composite from concrete under service loads. Moreover, the loss in bond strength seems to be tapering off, and most of the bond strength degradation may have already occurred. However, it is recommended that more tests should be carried out for a longer time frame, which should extend to ten years; original specimens are available for this purpose.

(2) Construction

Visual inspection of the bridge had revealed that there was some delamination of the concrete cover at the bent cap. For a CFRP composite retrofit design to be successful, it is very important that the delaminated concrete be removed, and be replaced by shotcrete or equivalent material at the substrate to achieve a satisfactory force transfer from sound concrete to the CFRP overlays. It should be noted that before any application of CFRP composites, new concrete had to be cast to form a suitable surface for the vertical overlay sheets going over the bent cap and onto the column to form the "U-strap". The gap left between the strap, the bent cap, and the column was filled with structural foam.

The seismic retrofit used a carbon fiber/epoxy system and was implemented using a wet-layup procedure under specified ambient temperature curing conditions. The required number of layers was applied during construction with a saturating machine, controlled manually, which is a better method than saturating the fibers with resin using a spatula. In order to maintain a relatively constant fiber volume, the following procedure was used: a small area of dry carbon fiber was weighed and was then saturated through the saturator and weighed again. From previous testing of tensile coupons, the optimum ratio of the two weight measurements was known; the opening of the saturator was then adjusted to produce the desired weight ratio. This was done at the beginning of every working day in order to minimize variations in the CFRP composite properties.

The sequence of CFRP composite application was as follows: (1) the first CFRP layers were placed on the columns; (2) the remaining layers were placed on the columns to complete the required number, starting at the column bottom and proceeding to the top; the CFRP composite was continued underneath the soil all the way to the top of the footing, but was stopped short of the footing surface by 51 mm to avoid any strength and stiffness increases; (3) the flexural strengthening of the bent cap was accomplished by successively applying the CFRP layers at the bottom of the beam (at the ends of the beam, near the columns the sheets were terminated 51 mm from the end of the previous sheet to avoid stress concentrations from the retrofit); (4) the diagonal sheets were applied over the cap beam to column joints in the ankle wrap configuration at ±45 degrees from the horizontal; (5) the four-sided CFRP wraps were then applied on the cap beam at the various design thicknesses; (6) the "U-strap" vertical CFRP sheets were applied over the cap beam and down to the column, and subsequently the circular clamping CFRP sheets were applied over the U-strap sheets; and (7) the UV protective coating was applied over the CFRP composite. Two bents were overlaid with CFRP composite jackets simultaneously. The total time required for the retrofit of all four bents with the CFRP composite was approximately three months. The CFRP composite flat coupon tests during bridge construction showed that the CFRP composite met UDOT's *Supplemental Specification*; in addition, no other design deficiencies were found in terms of the CFRP composite material. Remedial actions involved epoxy injection of voids; no other repairs were necessary.

The application of the seismic retrofit was performed by workers that were not particularly skilled in using CFRP composite materials but they were given training on how to apply these materials. The workers had gained their experience at the Structures Laboratory of the University of Utah and at a workshop, organized by UDOT. In addition, UDOT's *Supplemental Specification* had a requirement that the contractor procure the services of a manufacturer's representative of the CFRP composite material; this was very valuable for the successful completion of the project. It is believed that with more training of skilled workers and UDOT

personnel, the application component of the CFRP composite retrofit would not impede its widespread application.

It is clear that even though degradation of the physical properties of specimens in the laboratory was less than the exposed specimens stored at the bridge, aging is a factor in this degradation. The wire brush surface preparation can be satisfactory for certain areas where bond strength is not critical, but the area should be cleaned thoroughly. The water jet surface preparation is acceptable but care should be taken so that the amount of exposed aggregate depth is not too severe. The option of no surface preparation is not recommended.

(3) Specifications, Design, and Seismic Performance

Knowing what we know today, it is probable that the CFRP composite would have been saturated using an electric saturating machine, which would ensure a more uniform application of the resin into the carbon fabric. This would improve greatly the consistent quality of the material and should be required in future specifications. From the actual application, it is recommended that a maximum of five layers should be applied at a time, as in the case of the columns, otherwise the material is pulled down by gravity; this requirement should also be included in future specifications. It is desirable that where two or more layers are applied at a time, a shrink wrap material should be applied over the CFRP composite, during curing, to assist in consolidation. Thermal imaging is recommended during construction, as a diagnostic tool for better quality control, to assist in the discovery of large voids and this should be included in future specifications.

In terms of the seismic design, a new element that would have been added in the design of the CFRP seismic retrofit is the horizontal CFRP sheets along the axis of the bent cap in the vicinity of the bent cap-column joints; this would assist in the transfer of diagonal tension stresses in the bent cap-column joints. This recommendation was verified in the South Temple in-situ cyclic pushover tests of similar bridges rehabilitated with FRP composites (Pantelides et al. 2003b).

In light of the bond strength degradation, which was observed in the destructive tests, one method for improving the design of the CFRP composite seismic retrofit, would be the use of additional mechanical anchorage of the longitudinal CFRP composite sheets at the bottom of the cap beam. This mechanical anchorage could be a thin steel or CFRP composite precured plate anchoring several inches of the CFRP composite sheet at its ends; the steel or CFRP composite precured plate could be attached to the cap beam bottom using adhesive bolt anchors (Pantelides and Reaveley 2003). On the other hand, bond strength degradation is not as important for the columns, where the confinement of bonded or non-bonded FRP jackets is approximately equally effective. The environmental effects that have occurred to date would not have an effect on the seismic performance of the structure.

(4) Future Applications

It is clear from the above findings that the most important factor affecting the degradation of the CFRP composite application on the State Street Bridge is UV radiation. In addition, there is a detectable amount of bond strength degradation. Fortunately, bond strength degradation, although measurable, is within the variation which is observed when different surface preparation procedures such as wire brush, sandblast, or water jet are used. In addition, the decrease in bond strength seems to be tapering off and it is believed that most of the bond strength degradation may have already occurred.

The design and construction of the seismic retrofit required covering the entire surface of the bridge with CFRP composites. There has been no indication of damage to the concrete, or any additional steel reinforcement corrosion due to the application or presence of the CFRP composite. Therefore, at the very least, the CFRP composite retrofit has prolonged the useful life of the bridge up to the present (six years) and is expected to continue protecting the bridge from the environment and therefore continue to be an effective seismic retrofit for the foreseeable future. The health monitoring and destructive tests carried out in this research have shown that the environment affects the CFRP composite-to-concrete bond capacity and the effectiveness of the CFRP composite in concrete confinement at ultimate loads. It has been observed that environmental degradation can be reduced by applying an additional number of CFRP composite layers to act as a protective shield, and by applying a UV resistant coating.

In effect, by applying the CFRP composite jackets, any corrosion that could be seriously reducing the structural integrity of the structure was essentially stopped. In future applications instead of using carbon FRP composites for the total required thickness of the retrofit, it is recommended that a single carbon FRP layer be applied first and the remaining layers could be made of glass FRP composites; thus, corrosion protection could be achieved at a reduced cost.

Further testing and monitoring is required to assess the extent of environmental effects on CFRP composite-to-concrete bond and CFRP composite confinement of concrete for long periods of time. Overall, the general recommendation is that this type of retrofit is a viable candidate for application to reinforced concrete bridges in future projects.

7. REFERENCES

American Society for Testing and Materials. (2001a). "Standard Test Method for Tensile Properties of Polymer Matrix Composite Materials," ASTM D3039, *ASTM Standards*, 15.03, 105-115, West Conshohocken, Pa.

American Society for Testing and Materials. (2001b). "Apparent Tensile Strength of Ring or Tubular Plastics and Reinforced Plastics by Split Disk Method," ASTM D2290, *ASTM Standards*, 08.04, 97-99, West Conshohocken, Pa.

American Society for Testing and Materials. (2001c). "Standard Test Method for Pull-Off Strength of Coatings Using Portable Adhesion Testers," ASTM D4541, *ASTM Standards*, 06.02, 332-342, West Conshohocken, Pa.

Cardon, A.H., Bruggeman, M., Yan, Q., and Harou-Kouka, S. (1996). "Durability Analysis of Polymer Matrix Composites," *Advanced Composite Materials in Bridges and Structures*, Canadian Society for Civil Engineering, Montreal, Quebec, Canada, 657-663.

Hag-Elsafi, O., Kunin, J. and Alampalli, S. (2003). "In-Service Evaluation of a Concrete Bridge FRP Strengthening System," *Special Report FHWA/NY/SR-03/139, New York State Department of Transportation*, Albany, N.Y.

Harries, K.A., Porter, M.L., and Busel, J.P. (2003). "FRP materials and concrete research needs," *Concrete International*, 25(10), 69-74.

Hayes, M.D., Lesko, J.J., Haramis, J., Cousins, T.E., Gomez, J., and Masarelli, P. (2000). "Laboratory and field testing of composite bridge superstructure," *J. of Composites for Construction*, 4(3), 120-128.

Karbhari, V.M., Rivera, J., and Zhang, J. (2002). "Low-temperature hygrothermal degradation of ambient cured E-glass/vinylester composites," *J. Applied Polymer Science*, 86(9), 225-2260.

Pantelides, C.P., and Reaveley, L.D. (2003). "Interconnection of building panels using fiber reinforced plastic composite-material connector plate," US Patent No. 6,571,524 B2, June 3, 2003.

Pantelides, C.P., Volnyy, V.A., Gergely, J., and Reaveley, L.D. (2003a). "Seismic retrofit of precast concrete panel connections with carbon fiber reinforced polymer composites." *PCI Journal*, 48(1), 92-104.

Pantelides, C.P., Duffin, J.B., Ward, J.P., Delahunty, C.A., and Reaveley, L.D. (2003b). "In-situ Tests of Three Bents at South Temple Bridge on Interstate 15 – Final Report." *Report No.* CVEEN-02/03, Department of Civil and Environmental Engineering, University of Utah, Salt Lake City, Utah, June 2003, 223 pages.

Pantelides, C.P., Cercone, L., and Policelli, F. (2004a). “Development of a specification for bridge seismic retrofit with CFRP composites,” *J. of Composites for Construction*, 8(1), 88-96.

Pantelides, C.P., Alameddine, F., Sardo, T., and Imbsen, R.A. (2004b). “Seismic retrofit of State Street Bridge on Interstate 80,” *J. of Bridge Engineering*, 9(4), 333-342.

Starnes, M.A., Carino, N.J, and Kausel, E.A. (2003). “Preliminary thermography studies for quality control of concrete structures strengthened with fiber-reinforced polymer composites,” *J. of Materials in Civil Engineering*, 15(3), 266-273.

Teng, M., Sotelino, E.D., and Chen, W. (2003). “Performance Evaluation of Reinforced Concrete Bridge Columns Wrapped with Fiber Reinforced Polymers,” *J. of Composites for Construction*, 7(2), 83-92.

Wu, L., Hoa, S.V., and Ton-That, M-T. (2004). “Effects of water on the curing and properties of epoxy adhesive used for bonding FRP composite sheet to concrete,” *J. Applied Polymer Science*, 92(4), 2261-2268.

Zhang, J.S., and Karbhari, V.M. (2000). “NOL testing of Hexcel carbon/epoxy rings-phase 2,” *Rep. No. TR-2000/10*, Univ. of California, San Diego, La Jolla, Calif.