TRENCHED CONDUIT

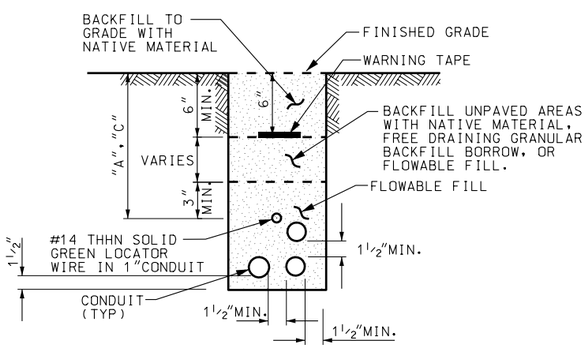

NON-MULTIDUCT CONDUIT

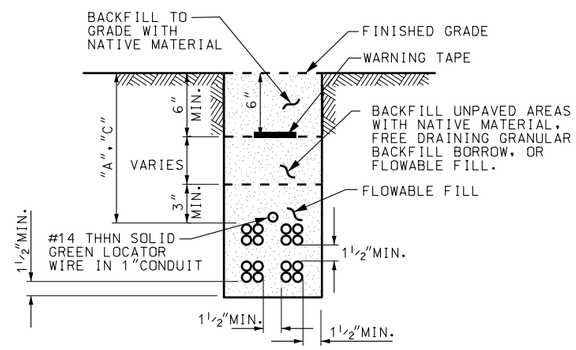

MULTIDUCT CONDUIT

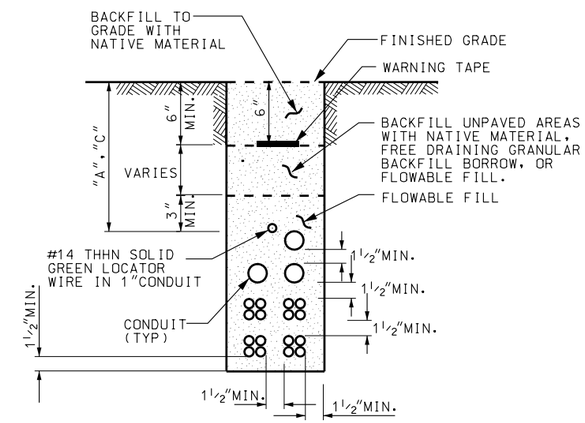

MULTIDUCT AND NON-MULTIDUCT CONDUIT

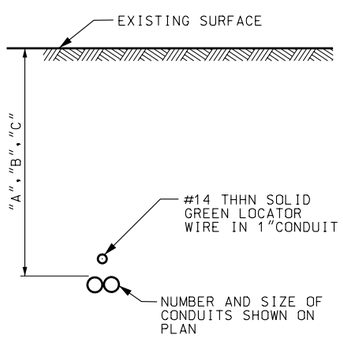

CONDUIT BORED, JACKED, OR DRILLED

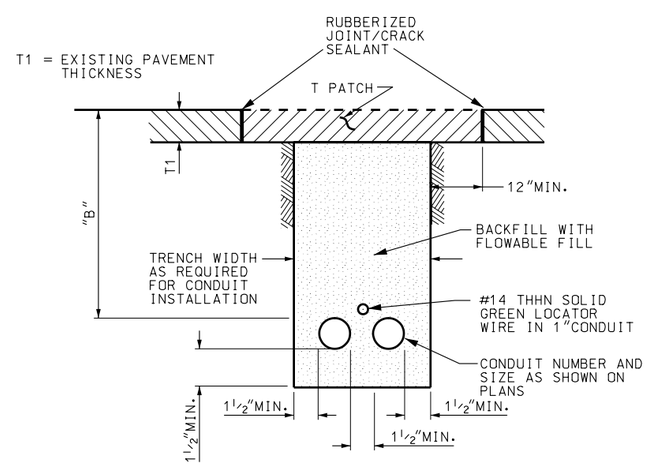

CONDUIT TRENCHED UNDER ASPHALT PAVEMENT RESTORED WITH T PATCH

TABLE 1. T PATCH RESTORATION

EXISTING ASPHALT PAVEMENT THICKNESS (T1) IN INCHES	RESTORATION T PATCH THICKNESS IN INCHES
0 – 3½	3½
3½ – 6	MATCH EXISTING DEPTH
6 OR GREATER	6

TABLE 2. CONDUIT DEPTH

	DEPTH IN INCHES	AREA
A	24	PAVED DITCHES, UNLINED DITCHES, GUTTERS, SIDEWALK
B	36	HIGHWAY RIGHT OF WAY UNDER ASPHALT PAVEMENT SURFACE
C	60	W/IN 20ft OF PAVEMENT EDGE WHERE SIGNS OR DELINEATORS PRESENT

REVISIONS

NO.	DATE	APPR.	REMARKS

UTAH DEPARTMENT OF TRANSPORTATION
STANDARD DRAWINGS FOR ROAD AND BRIDGE CONSTRUCTION
SALT LAKE CITY, UTAH

RECOMMENDED FOR APPROVAL — JULY 03,2002 DATE
CHAIRMAN STANDARDS COMMITTEE APPROVED — JULY 03,2002 DATE
DEPUTY DIRECTOR

CONDUIT DETAILS

STANDARD DRAWING TITLE

STD DWG
AT 6