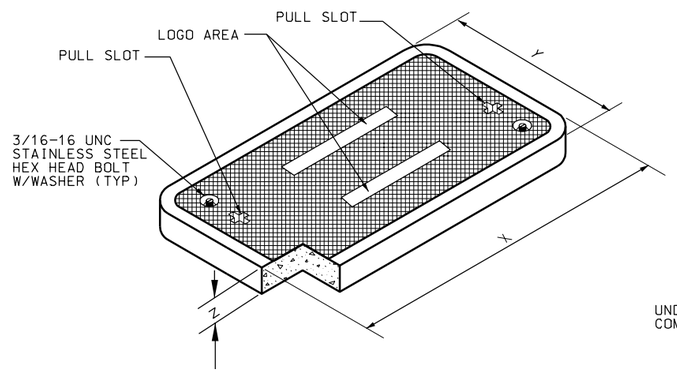

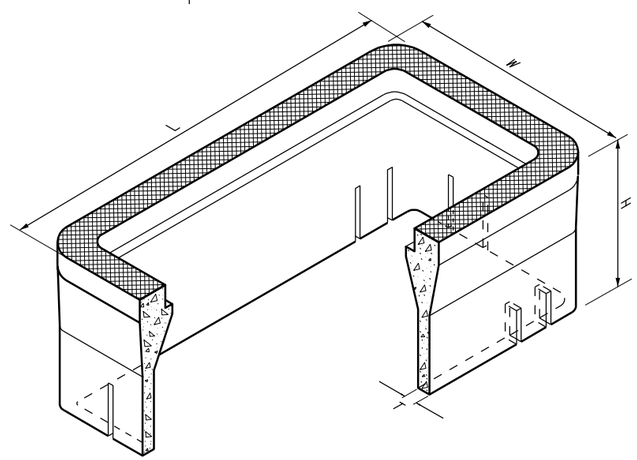

BOX AND LID DIMENSIONS

BOX TYPE	"L" inch	"W" inch	"H" inch	"T" inch	"X" inch	"Y" inch	"Z" inch
I-PC	25	16	24	$1\frac{1}{2}$	$23\frac{1}{4}$	$13\frac{3}{4}$	2
II-PC	$37\frac{5}{8}$	26	24	$1\frac{1}{2}$	$35\frac{5}{8}$	24	3
III-PC	$49\frac{5}{8}$	$32\frac{1}{8}$	24	2	$47\frac{5}{8}$	$30\frac{1}{8}$	3

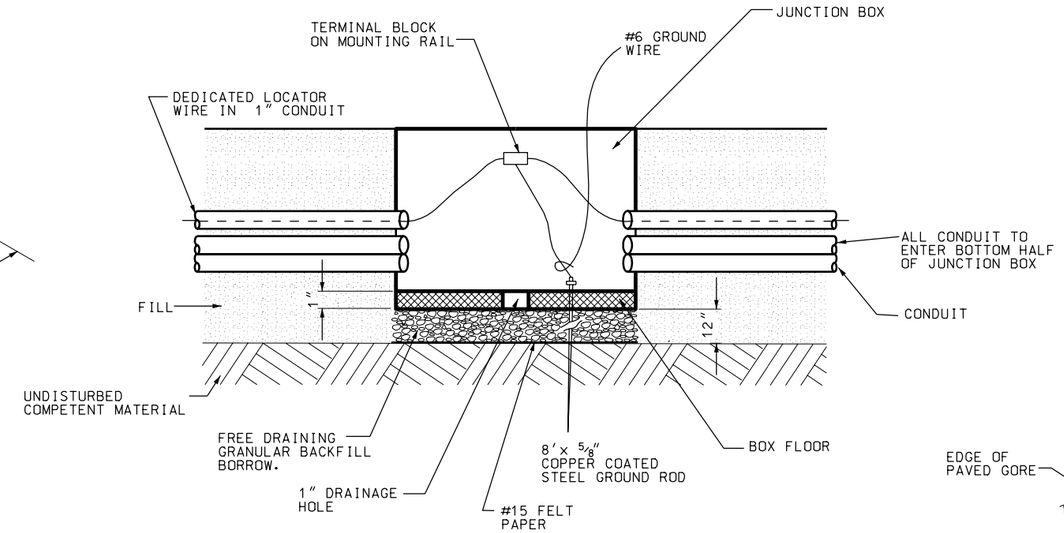

JUNCTION BOX CONDUIT PENETRATION DETAIL

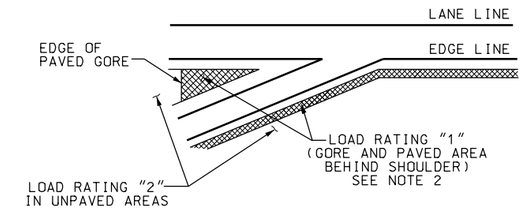

FREEWAY APPLICATION

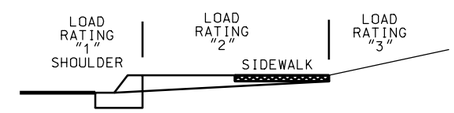

ARTERIAL STREET APPLICATION

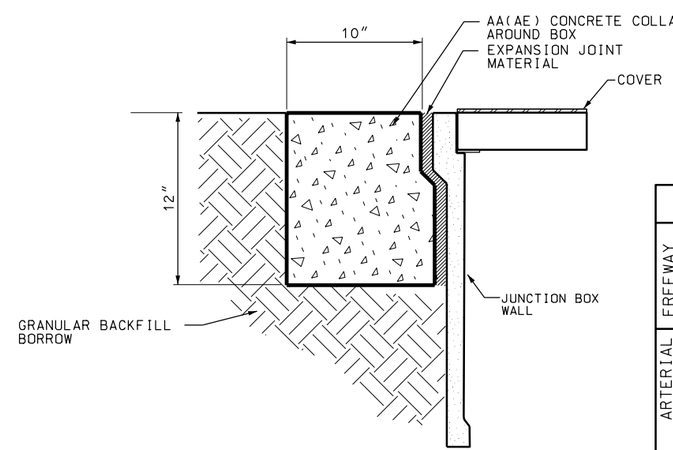

JUNCTION BOX CONCRETE COLLAR DETAIL

TABLE 1. FREEWAY AND ARTERIAL STREET APPLICATIONS

	APPLICATION	LOAD RATING 1	2	3
FREEWAY	INCIDENTAL TRAFFIC: PAVED GORE, PAVED AREA BEHIND SHOULDER	X		
FREEWAY	ALL OTHER AREAS		X	
ARTERIAL	PAVED SHOULDER OUT OF TRAFFIC	X		
ARTERIAL	NON-RAISED MEDIAN, INDUSTRIAL/COMMERCIAL DRIVEWAYS	X		
ARTERIAL	PARKWAY/SIDEWALK		X	
ARTERIAL	BEHIND SIDEWALK, NOT WHEEL LOADING ACCESSIBLE			X

TABLE 2. JUNCTION BOX LID STATIC VERTICAL LOAD RATING

LOAD RATING	COVER ENCLOSURE	DESIGN LOAD (lb)	TEST LOAD (lb)	TEST AREA (inch)
1	HS20	21000	45000	10 x 20
2	INCIDENTAL TRAFFIC (10K)	10000	22500	10 x 20
3	POLYMER CONCRETE	8000	12000	10 x 10

NOTES:

1. BOX TITLE NEEDS TO BE STAMPED INTO THE LID FROM THE FACTORY. (SEE SECTION 13554 ARTICLE 2.2H).
2. DO NOT PLACE JUNCTION BOXES IN THE TRAVELED-WAY OR ON FREEWAY SHOULDERS.

REVISIONS

NO.	DATE	APPR.	REMARKS
1	10/30/02	C.W.	CORRECTED CONDUIT SIZE 3/4" TO 1" IN THE JUNCTION BOX CONDUIT PENETRATION DETAIL
2	3/20/03	J.R.	LARGER TYPE II-PC BOX AND LOAD RATING LOCATIONS NO LONGER IN TRAVELED WAY. NEW NOTE 1. NOTE 2 ADDED.

UTAH DEPARTMENT OF TRANSPORTATION
STANDARD DRAWINGS FOR ROAD AND BRIDGE CONSTRUCTION
SALT LAKE CITY, UTAH

RECOMMENDED FOR APPROVAL — APR. 24, 2003 DATE

CHAIRMAN STANDARDS COMMITTEE APPROVED — APR. 24, 2003 DATE

DEPUTY DIRECTOR

POLYMER-CONCRETE JUNCTION BOX DETAILS

STANDARD DRAWING TITLE

STD DWG
AT 7