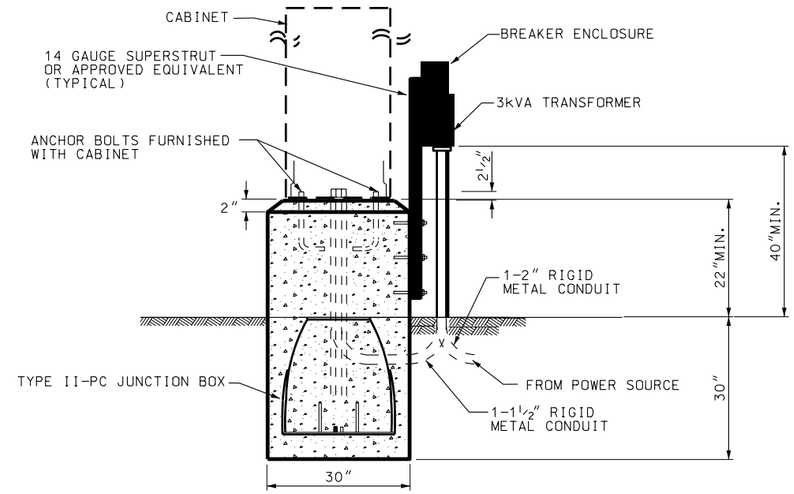


ATMS/334 CABINET - FRONT VIEW

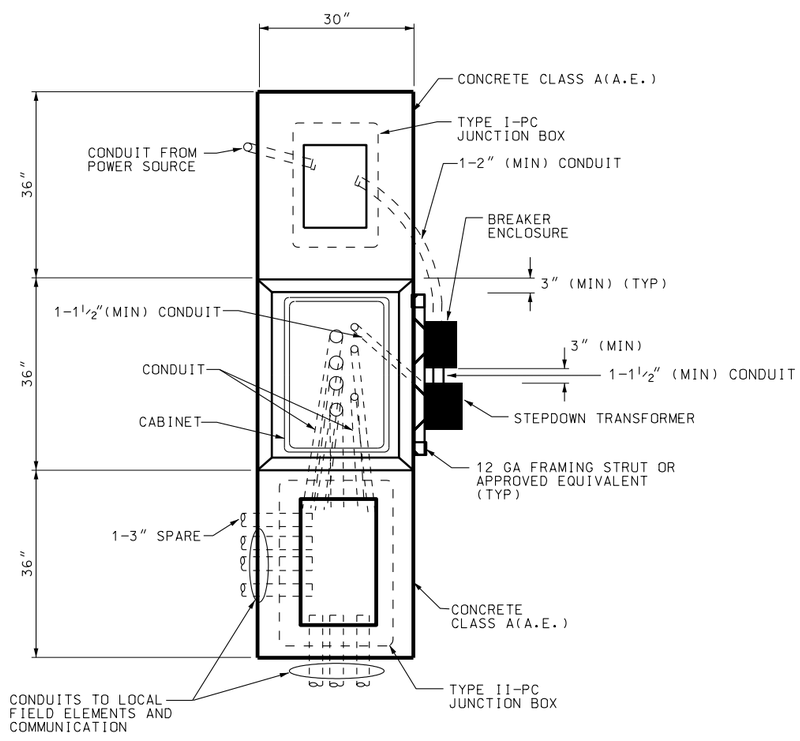


ATMS CABINET - PLAN VIEW

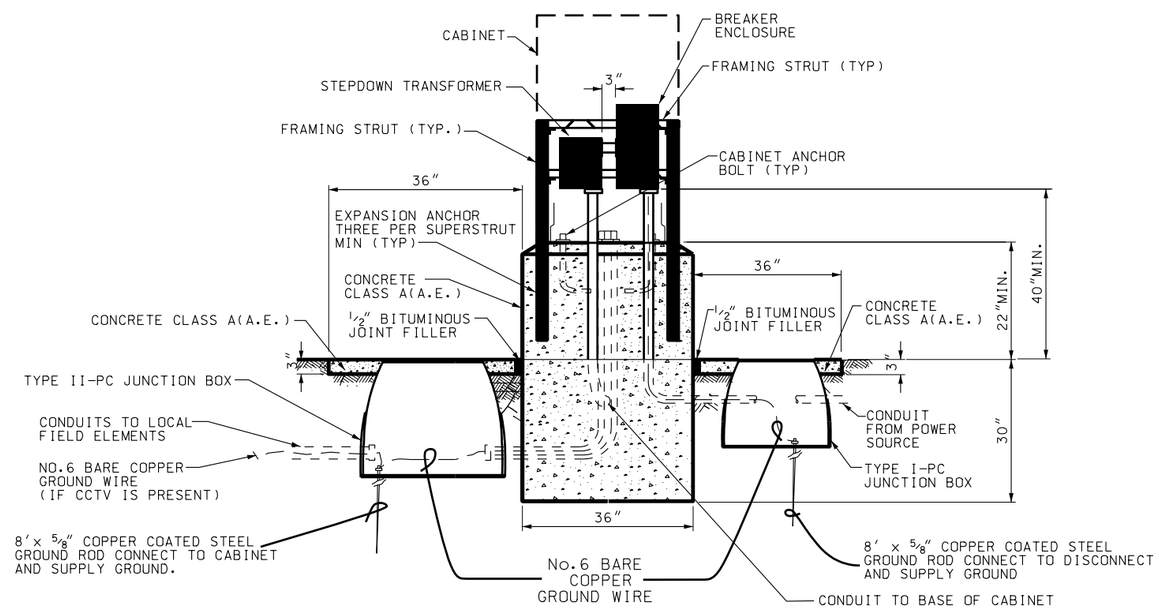


ATMS CABINET - SIDE VIEW

ATMS CABINET WITH STEPDOWN TRANSFORMER

| NO. | DATE | APPR. | REMARKS |
|---|---|---|---|
| | | | |

REVISIONS

**UTAH DEPARTMENT OF TRANSPORTATION**
STANDARD DRAWINGS FOR ROAD AND BRIDGE CONSTRUCTION
SALT LAKE CITY, UTAH

RECOMMENDED FOR APPROVAL — JULY 03,2002 DATE

CHAIRMAN STANDARDS COMMITTEE APPROVED — JULY 03,2002 DATE

DEPUTY DIRECTOR

STANDARD DRAWING TITLE: ATMS CAB WITH STEPDOWN TRANSFORMER

STD DWG
AT 9