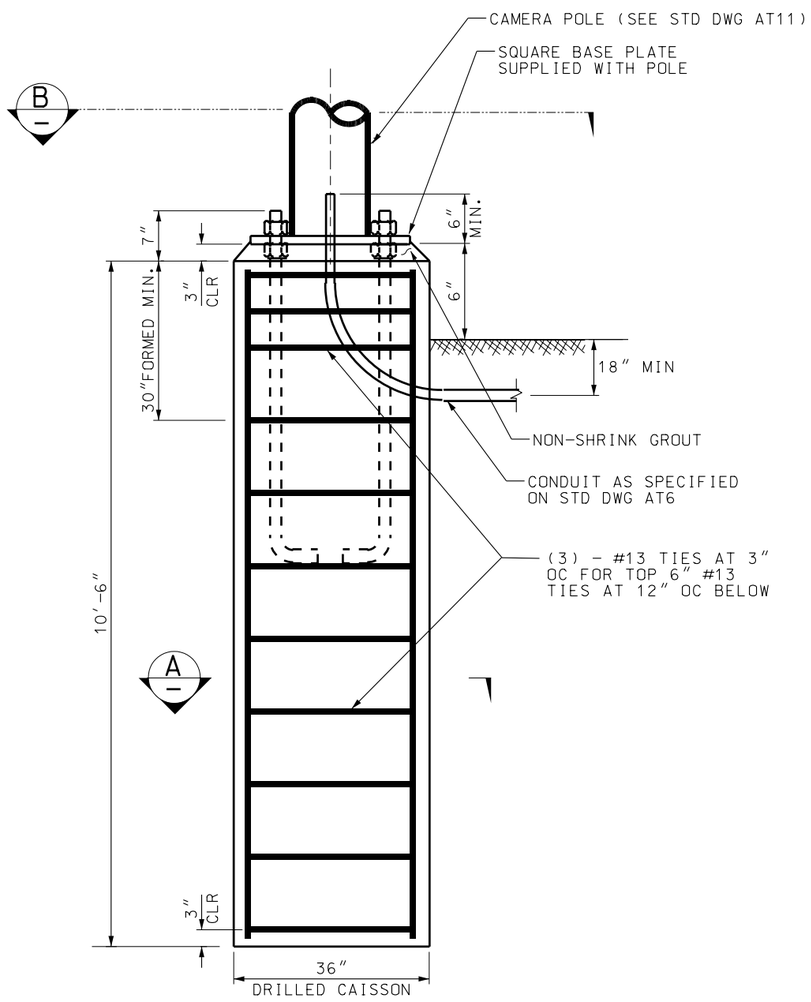

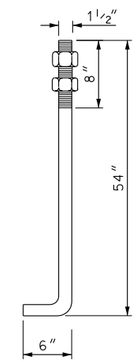

(4) - ANCHOR BOLTS WITH
(2) - HEX NUTS AND 2 WASHERS

GALVANIZE THE TOP 10" OF THE ANCHOR BOLTS IN ACCORDANCE WITH ASTM A 153

DETAIL 1
ANCHOR BOLTS

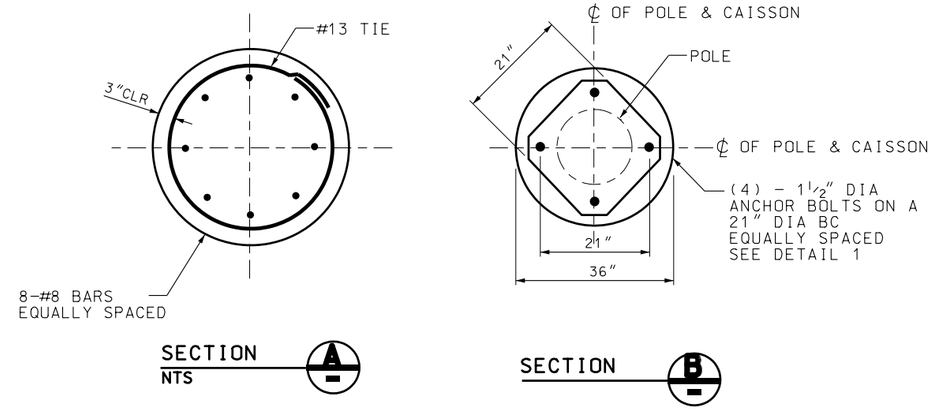

CAISSON FOUNDATION DETAILS

NO.	DATE	APPR.	REMARKS

REVISIONS

UTAH DEPARTMENT OF TRANSPORTATION
STANDARD DRAWINGS FOR ROAD AND BRIDGE CONSTRUCTION
SALT LAKE CITY, UTAH

RECOMMENDED FOR APPROVAL — JULY 03,2002 DATE
CHAIRMAN STANDARDS COMMITTEE APPROVED — JULY 03,2002 DATE
DEPUTY DIRECTOR

CCTV POLE FOUNDATION FOR DEDICATED CCTV POLE
STANDARD DRAWING TITLE

STD DWG
AT 12