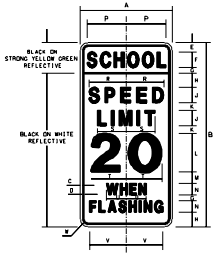

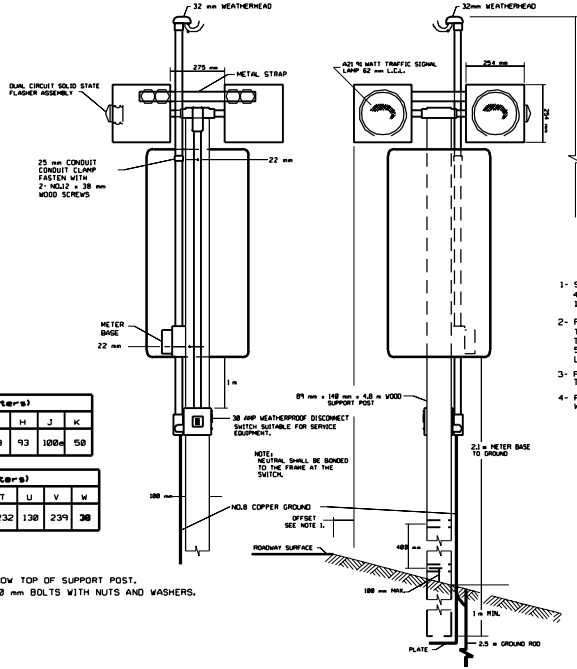

SIGN	DIMENSION (millimeters)									
	A	B	C	D	E	F	G	H	J	K
STANDARD or MINIMUM	600	1200	10	19	62	100d	38	93	100e	50

SIGN	DIMENSION (millimeters)									
	L	M	N	P	R	S	T	U	V	W
STANDARD or MINIMUM	250e	76	75d	257	244	187	232	130	239	38

ASSEMBLY

1- TOP OF SIGN IS TO BE 200 mm BELOW TOP OF SUPPORT POST. ATTACH TO POSTS WITH 175 mm x 10 mm BOLTS WITH NUTS AND WASHERS.

INSTALLATION

1- SIGN ASSEMBLY OFFSET SHOULD BE A MINIMUM OF: 450 mm FROM FACE OF CURB. 1.8 m FROM TRAVELED WAY IN ABSENCE OF CURB.

2- FIELD DRILL TWO 38 mm DIAMETER HOLES IN THE CENTER OF THE POST. DRILL PERPENDICULAR TO THE CENTER LINE OF THE ROAD. PLACE ONE HOLE AT 50 mm AND ONE AT 450 mm ABOVE THE GROUND LINE.

3- FACE OF SIGN SHOULD BE INSTALLED AT 90° ANGLE TO THE EDGE OF ROADWAY.

4- POWER SUPPLY 120 VOLTS, INSTALLED IN ACCORDANCE WITH NATIONAL ELECTRICAL CODE.

ALL DIMENSIONS ARE SHOWN IN MILLIMETERS (mm) UNLESS OTHERWISE NOTED.

REVISIONS

NO.	DATE		REMARKS
1	04/22/99	S.A.	DRAWINGS ELECTRONICALLY ENHANCED. NO CHANGE IN CONCEPT.
2	10/23/00	F.L.	CHANGED COLOR YELLOW TO STRONG YELLOW GREEN

UTAH DEPARTMENT OF TRANSPORTATION
STANDARD DRAWINGS FOR ROAD AND BRIDGE CONSTRUCTION
SALT LAKE CITY, UTAH

RECOMMENDED FOR APPROVAL
CHAIRMAN STANDARDS COMMITTEE
APPROVED
DEPUTY DIRECTOR

NOV 14, 2000
DATE
NOV 14, 2000
DATE

(METRIC)

FLASHING SCHOOL SIGN

STANDARD DRAWING

STD. DWG. NO.
745-48A